winteb
Established in 1952

THE ORIGINAL

The world's largest producer of seawater resistant aluminium air pipe heads with more than 60 years of experience

Made of seawater resistant Aluminium DIN1725 | Non corroding | Maintenance free | Smallest design available
No suction blocking | Cost saving | light weight = less fuel = less CO2 emission | Approved by all major classification societies

Winteb B.V.
Parallelweg 1
9672 AW Winschoten
The Netherlands

Tel: +31 597 412252
Fax: +31 597 420494
Email: info@winteb.nl
Website: www.winteb.com

Bank: ABN AMRO
Bank account: 211159689
IBAN: NL58ABNA0211159689
Bic: ABNANL2A

KvK/CC: 56801068
VAT: NL852308413B01

The world's largest producer of seawater resistant aluminium air pipe heads Innovative and high quality products

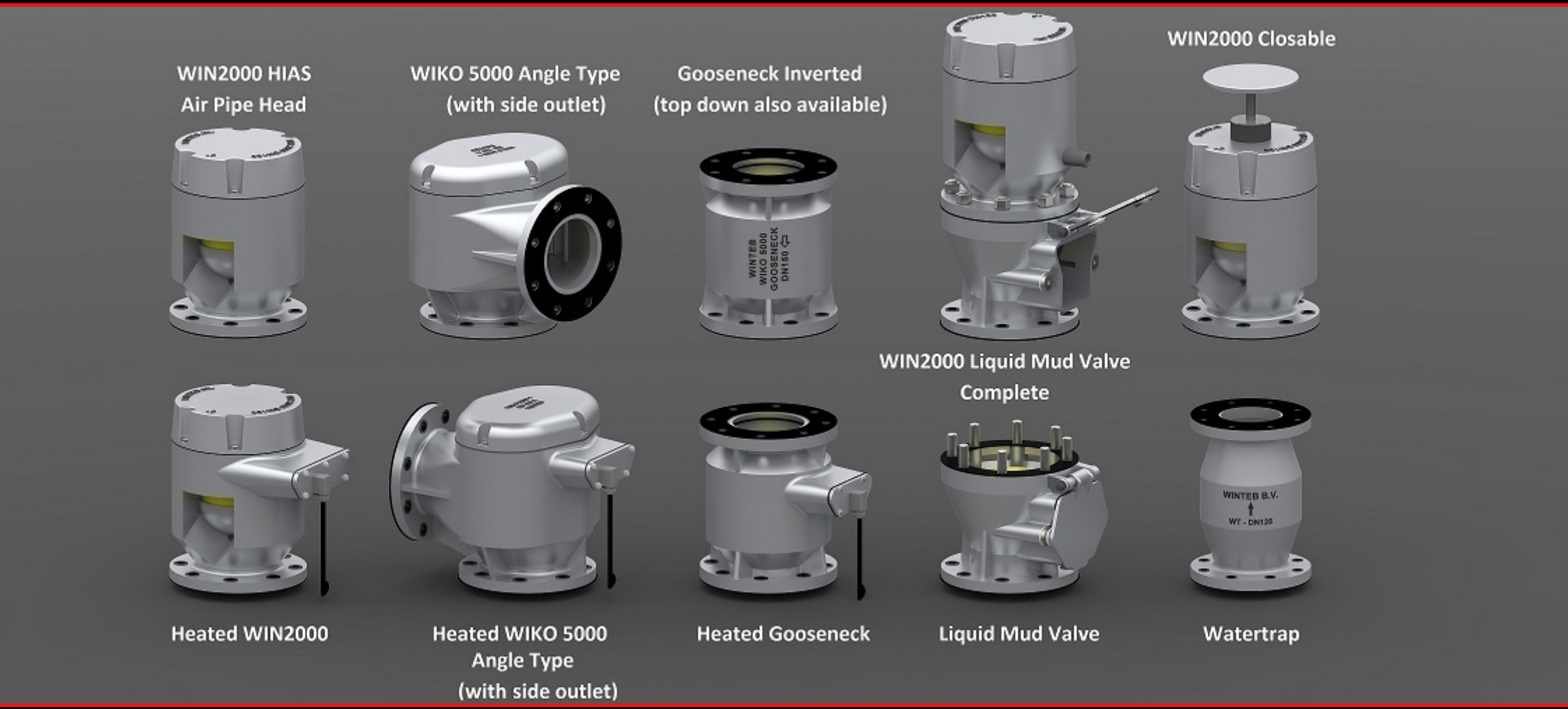

Made of seawater resistant Aluminium DIN1725 | Non corroding | Maintenance free | Smallest design available
No suction blocking | Cost saving | light weight = less fuel = less CO2 emission | Approved by all major classification societies

Winteb B.V.
Parallelweg 1
9672 AW Winschoten
The Netherlands

Tel: +31 597 412252
Fax: +31 597 420494
Email: info@winteb.nl
Website: www.winteb.com

Bank: ABN AMRO
Bank account: 211159689
IBAN: NL58ABNA0211159689
Bic: ABNANL2A

KvK/CC: 56801068
VAT: NL852308413B01

The world's largest producer of seawater resistant aluminium air pipe heads
Innovative and high quality products

WINTEB BV PROUDLY PRESENTS:
THE HIGH INLET AIR SPEED EXECUTION
HIAS

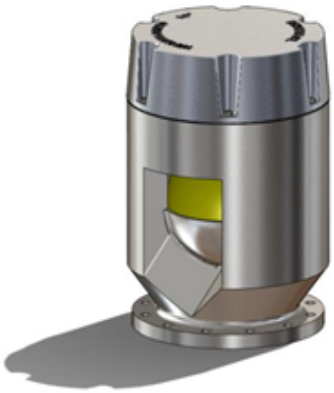

The patented HIAS technology has significantly increased the maximum inlet air speed. Especially designed for stability tanks and anti-heeling tanks.

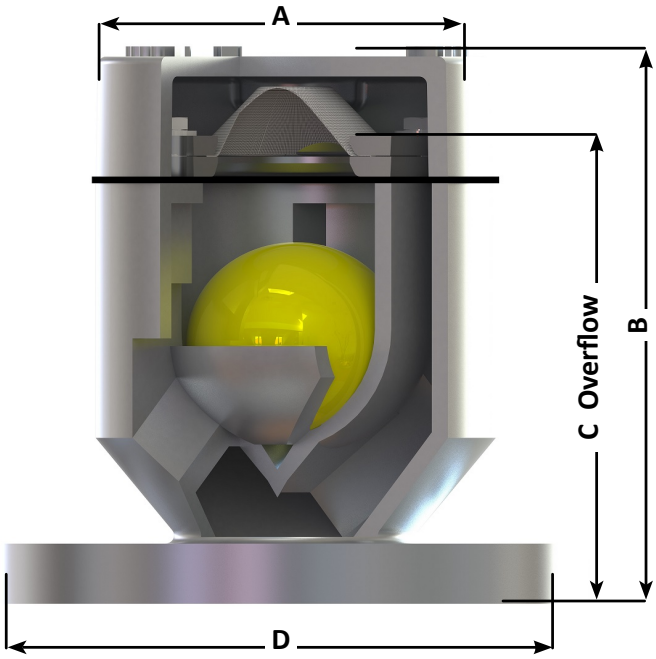

Options:
1. Closing device*
2. Screen*
3. Threaded connection, only for aluminium pipes.
4. Powder (epoxy) coating
5. Sounding pipe
6. Small flange connection

**Either option 1 or 2*
(Closing device or screen)

WIN2000 HIAS WITH SCREEN (screen is optional)

	DN50 (2")	DN65 (2½")	DN80 (3")	DN100 (4")	DN125 (5")	DN150 (6")	DN175 (7")	DN200 (8")	DN250 (10")	DN300 (12")	DN350 (14")	DN400 (16")	DN450 (18")	DN500 (20")
A	Ø110	Ø130	Ø160	Ø195	Ø233	Ø275	Ø275	Ø338	Ø442	Ø560	Ø645	Ø728	Ø740	Ø887
B ±2.5	169	203	235	272	321	380	380	481	595	774	840	945	1110	1148
C Overflow (with screen)	147	180	194	238	270	323	323	395	495	620	705	779	925	873
D	Flange connection according to any standard													
Ball diameter	Ø60	Ø75	Ø90	Ø105	Ø130	Ø155	Ø155	Ø200	Ø250	Ø325	Ø360	Ø400	Ø480	Ø500
Weight kg.	2	2.75	4	6.5	9	13	14	20	32	63	88	114	134	180
Flow rate at 0,25 bar(m3/h)**	19	28	46	73	114	182	210	325	469	850	1025	1300	1490	2150
Flow rate at 0,25 bar(m3/h)***	18	25	42	68	101	169	195	279	443	805	925	1175	1375	1925
Max. inlet air speed (m/s)	17	17,5	38	58	59	42	42	27	15	39	36	27	34	29
Inlet air flow rate at max inlet air speed (m3/h)	135	209	612	1620	2590	2700	2700	3060	2700	9900	12240	12060	19080	20880

** Please note that these values correspond with the WIN2000 HIAS **without screen**, flowrate is with water being pumped through the air pipe head.
*** Please note that these values correspond with the WIN2000 HIAS **with screen mesh 18**, flowrate is with water being pumped through the air pipe head.

Made of seawater resistant Aluminium DIN1725 | Non corroding | Maintenance free | Smallest design available
No suction blocking | Cost saving | light weight = less fuel = less CO2 emission | Approved by all major classification societies

Winteb B.V.
Parallelweg 1
9672 AW Winschoten
The Netherlands

Tel: +31 597 412252
Fax: +31 597 420494
Email: info@winteb.nl
Website: www.winteb.com

Bank: ABN AMRO
Bank account: 211159689
IBAN: NL58ABNA0211159689
Bic: ABNANL2A

KvK/CC: 56801068
VAT: NL852308413B01

The world's largest producer of seawater resistant aluminium air pipe heads with more than 60 years of experience

THE BEST CAN GET BETTER!

PATENTED HIAS TECHNOLOGY (NR 2010510)

+

IMPROVED LEAKAGE PROTECTION

=

HIAS 2.0

BENEFIT FROM THE BEST:

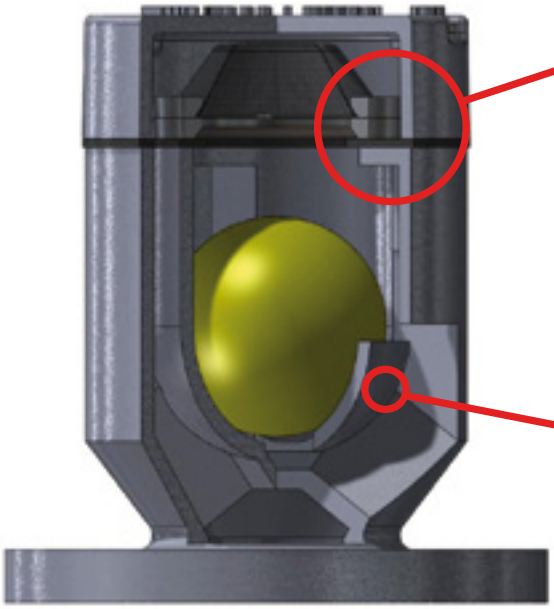

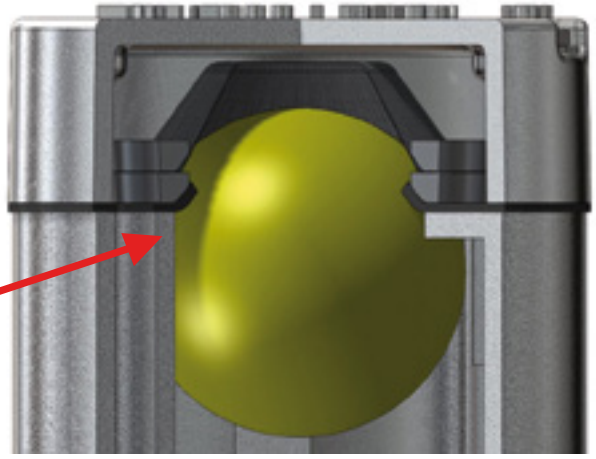

Traditional O-ring sealing replaced by simplified sealing solution. Resulting in:

1. Less spare parts
2. Saving of costs
3. Even better leakage protection

HIAS TECHNOLOGY (Patent nr 2010510)

The Ball rests in a 360° Chamber, which results in:

4. Inlet air speeds of 40 m/s and higher!
5. No more suction blocking
6. Anti Splash function
7. Anti Noise function

THE NEW STANDARD BY WINTEB

Made of seawater resistant Aluminium DIN1725 | Non corroding | Maintenance free | Smallest design available
No suction blocking | Cost saving | light weight = less fuel = less CO2 emission | Approved by all major classification societies

Winteb B.V.
Parallelweg 1
9672 AW Winschoten
The Netherlands

Tel: +31 597 412252
Fax: +31 597 420494
Email: info@winteb.nl
Website: www.winteb.com

Bank: ABN AMRO
Bank account: 211159689
IBAN: NL58ABNA0211159689
Bic: ABNANL2A

KvK/CC: 56801068
VAT: NL852308413B01

WINTEB SETS A NEW STANDARD IN AIR VENTING!

PATENTED HIAS TECHNOLOGY

(PATENT NR 2010510)

CURRENT VERSION

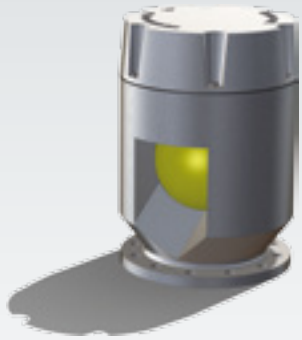

HIGH INLET AIR SPEED EXECUTION

Optimized Ball-Chamber and inlet ports for higher airspeeds:

The Ball rests in a 360° Chamber

Outside- and installation dimensions are the same as the current version

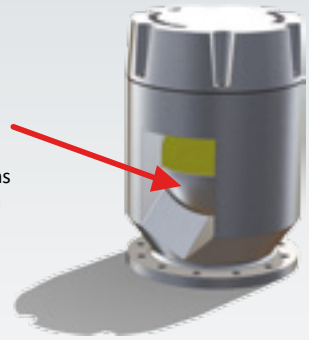

CURRENT VERSION

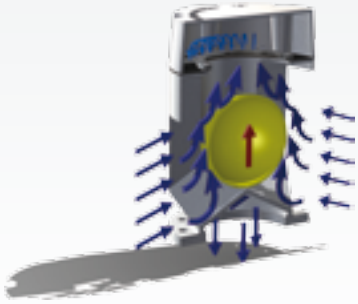

Sectional View

Airflow visualisation

Due to the airflow around almost the entire ball, the lift effect on the ball by the airflow, will be relatively high when used on e.g. stability tanks with excessively high airspeeds. The resulting force of the airflow onto the ball will mainly be directed upwards (red arrow).

HIGH INLET AIR SPEED EXECUTION

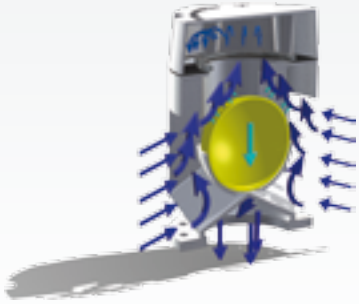

Sectional View

Airflow visualisation

The airflow is deflected from the lower half of the ball: even at high airspeeds, there will be almost no lift effect on the ball by the airflow. The resulting force of the airflow onto the ball will mainly be directed downwards (light blue arrow).

IMPROVED LEAKAGE PROTECTION:

1

2

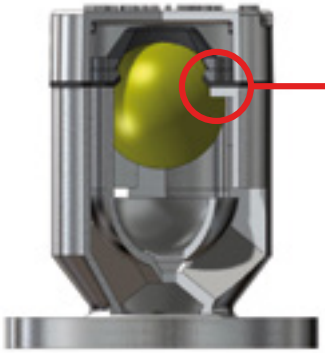

3

New Sealing

When water hits the ball, the floatball lifts and shuts the valve (1,2). No leakage will occur (3), because the sealing moves itself around the floatball and prevents water coming into the pipe.

Investing in Winteb Air Pipe Heads is beneficial in the long term, saving maintenance, replacement and costs.
For more information and a complete overview of our product range, please check www.winteb.com

Winteb B.V.
Parallelweg 1
9672 AW Winschoten
The Netherlands

Tel: +31 597 412252
Fax: +31 597 420494
Email: info@winteb.nl
Website: www.winteb.com

Bank: ABN AMRO
Bank account: 211159689
IBAN: NL58ABNA0211159689
Bic: ABNANL2A

KvK/CC: 56801068
VAT: NL852308413B01

The world's largest producer of seawater resistant aluminium air pipe heads
Innovative and high quality products

WIN2000 HEATED AIR PIPE HEAD

Face the cold with Winteb's heated Air Pipe Heads

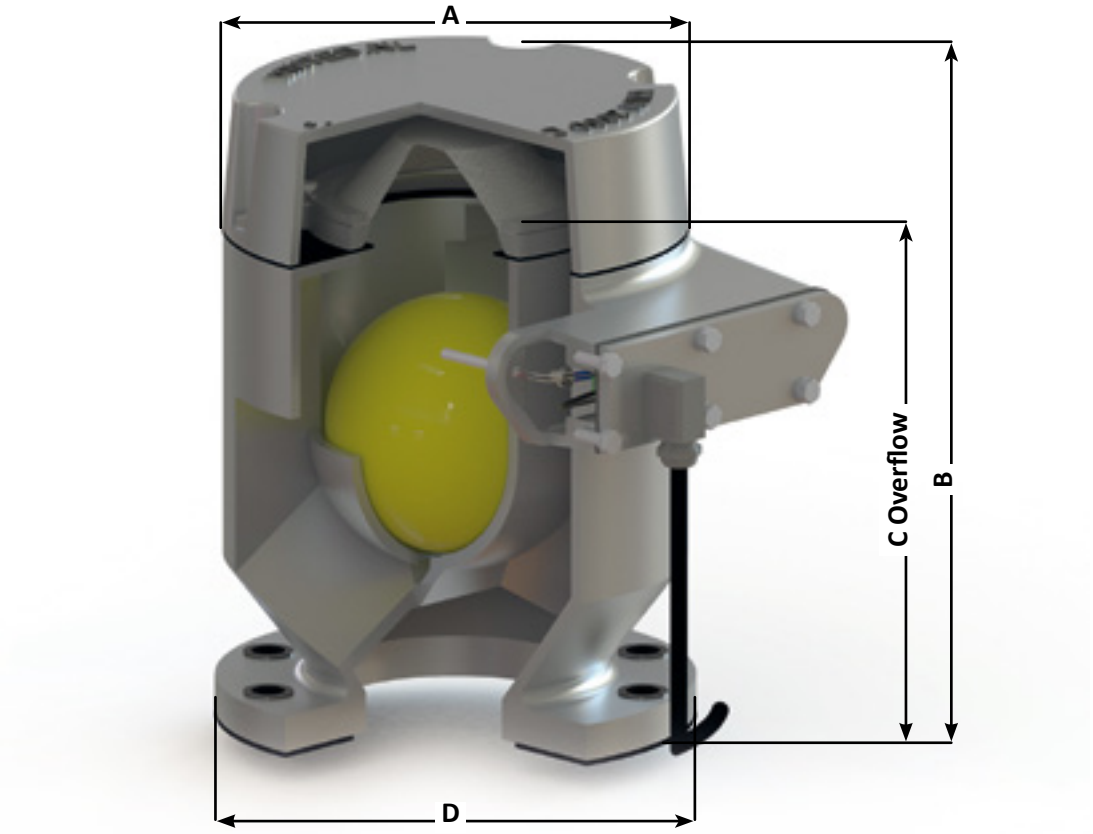

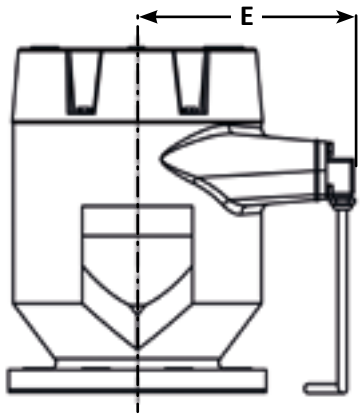

	DN50 (2")	DN65 (21/2")	DN80 (3")	DN100 (4")	DN125 (5")	DN150 (6")	DN175 (7")	DN200 (8")	DN250 (10")	DN300 (12")	DN350 (14")	DN400 (16")	DN450 (18")
A	Ø110	Ø130	Ø160	Ø195	Ø235	Ø275	Ø275	Ø340	Ø415	Ø562	Ø642	Ø722	Ø740
B ±2.5	169	203	235	272	321	380	380	481	595	774	840	945	1110
C Overflow (with screen)	147	180	194	238	270	323	323	395	495	620	705	737	925
D	Flange connection according to any standard												
E	145	165	180	189	204	229	229	271	311	388	428	478	528
Ball diameter	Ø60	Ø75	Ø90	Ø105	Ø130	Ø155	Ø155	Ø200	Ø250	Ø325	Ø360	Ø400	Ø480
Weight kg.	3.25	3.75	5	7.5	10	14.25	14.25	22.5	35	72	95	119	140
Power (w)	125	125	125	250	250	250	250	400	400	800	900	1000	1130
Flow rate at 0,25 bar (m3/h)*	19	28	46	73	114	182	210	325	469	850	1025	1300	1490
Flow rate at 0,25 bar (m3/h)**	18	25	42	68	101	169	195	279	443	805	925	1175	1375
Max. inlet air speed (m/s)	17	17.5	38	58	59	42	42	27	15	39	36	27	34
Inlet air flow rate at max. inlet air speed (m3/h)	135	209	612	1620	2590	2700	2700	3060	2700	9900	12240	12060	19080

* Please note that these values correspond with theWIN2000 HIAS without screen, flowrate is with water being pumped through the air pipe head.
** Please note that these values correspond with theWIN2000 HIAS with screen mesh 18, flowrate is with water being pumped through the air pipe head.

Made of seawater resistant Aluminium DIN1725 | Non corroding | Maintenance free | Smallest design available
No suction blocking | Cost saving | light weight = less fuel = less CO2 emission | Approved by all major classification societies

Winteb B.V.
Parallelweg 1
9672 AW Winschoten
The Netherlands

Tel: +31 597 412252
Fax: +31 597 420494
Email: info@winteb.nl
Website: www.winteb.com

Bank: ABN AMRO
Bank account: 211159689
IBAN: NL58ABNA0211159689
Bic: ABNANL2A

KvK/CC: 56801068
VAT: NL852308413B01

The world's largest producer of seawater resistant aluminium air pipe heads
Innovative and high quality products

WIN2000 HIAS WITH THREADED CONNECTION BSP AND SCREEN

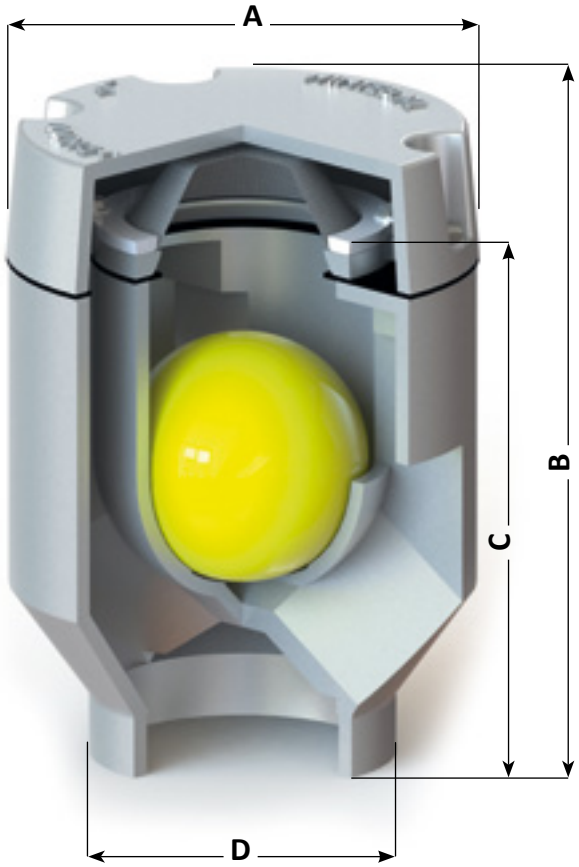

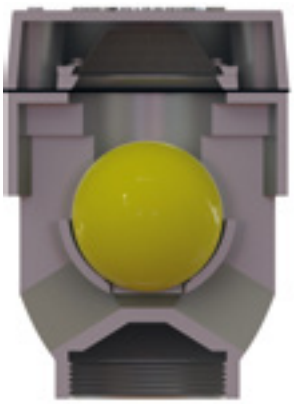

Options:
1. Closing device*
2. Screen*
3. Threaded connection (BSP/NPT), only for aluminium pipes.
4. Powder (epoxy) coating
5. Sounding pipe
6. (Small) flanged connection

**Either option 1 or 2*
(Closing device or screen)

	DN50 (2")	DN65 (2 ½")	DN80 (3")	DN100 (4")	DN125 (5")
A	Ø110	Ø130	Ø160	Ø195	Ø233
B ±2.5	164	203	230	280	318
C Overflow (with screen)	138	167	192	235	264
D (mm)	Ø74	Ø85	Ø110	Ø128	Ø160
Weight kg.	1,3	2	3,1	5,2	7,7
Ball diameter	Ø60	Ø75	Ø90	Ø105	Ø130
Flow rate at 0,25 bar(m3/h)*	19	28	46	73	114
Flow rate at 0,25 bar(m3/h)**	18	25	42	68	101
Max. inlet air speed (m/s)	17	17,5	38	58	59
Inlet air flow rate at max. inlet air speed (m3/h)	135	209	612	1620	2590

* Please note that these values correspond with the WIN2000 Type 1 **without screen**, flowrate is with water being pumped through the air pipe head.
** Please note that these values correspond with the WIN2000 Type 1 **with screen mesh 18**, flowrate is with water being pumped through the air pipe head.

Made of seawater resistant Aluminium DIN1725 | Non corroding | Maintenance free | Smallest design available
No suction blocking | Cost saving | light weight = less fuel = less CO2 emission | Approved by all major classification societies

Winteb B.V.
Parallelweg 1
9672 AW Winschoten
The Netherlands

Tel: +31 597 412252
Fax: +31 597 420494
Email: info@winteb.nl
Website: www.winteb.com

Bank: ABN AMRO
Bank account: 211159689
IBAN: NL58ABNA0211159689
Bic: ABNANL2A

KvK/CC: 56801068
VAT: NL852308413B01

The world's largest producer of seawater resistant aluminium air pipe heads
Innovative and high quality products

WIN2000 HIAS AIR PIPE HEADS WITH SMALL FLANGE CONNECTION

Options
1. Closing device*
2. Screen*
3. Threaded connection, only for aluminium pipes.
4. Powder (epoxy) coating
5. Sounding pipe
6. Small flange connection

**Either option 1 or 2 (Closing device or screen)*

Table 1: WIN2000 HIAS Air Pipe Head DN50-DN125 dimensions

	DN50 (2")	DN65 (2 ½")	DN80 (3")	DN100 (4")	DN125 (5")
A	Ø110	Ø130	Ø160	Ø195	Ø236
B ±2.5	165	200	230	270	319
C Overflow (with screen)	147	180	194	238	270
D1	Small flange connection: see Table 2 below				
Ball diameter	Ø60	Ø75	Ø90	Ø105	Ø130
Weight kg.	2	2.75	4	6.5	9
Flow rate at 0,25 bar(m3/h)**	19	28	46	73	114
Flow rate at 0,25 bar(m3/h) ***	18	25	42	68	101
Max. inlet air speed (m/s)	17	17,5	38	58	59
Inlet air flow rate at max. inlet air speed (m3/h)	135	209	612	1620	2590

*** Please note that these values correspond with the WIN2000 HIAS without screen, flowrate is with water being pumped through the air pipe head.*
**** Please note that these values correspond with the WIN2000 HIAS with screen mesh 18, flowrate is with water being pumped through the air pipe head.*

Table 2: Small flange dimensions

	DN50 (2")	DN65 (2 ½")	DN80 (3")	DN100 (4")	DN125 (5")
D	126	141	158	183	217
b	15	15	15	20	20
k	108	123	140	164	198
d5	61.1	77.1	90.3	115.9	141.6
d2	11	11	11	11	11
OD pipe	60	70	90	110	140
Weight of flange kg.	1.11	1.31	1.55	2.47	3.33
Bolts nxM	4xM10	4xM10	4xM10	6xM10	6xM10

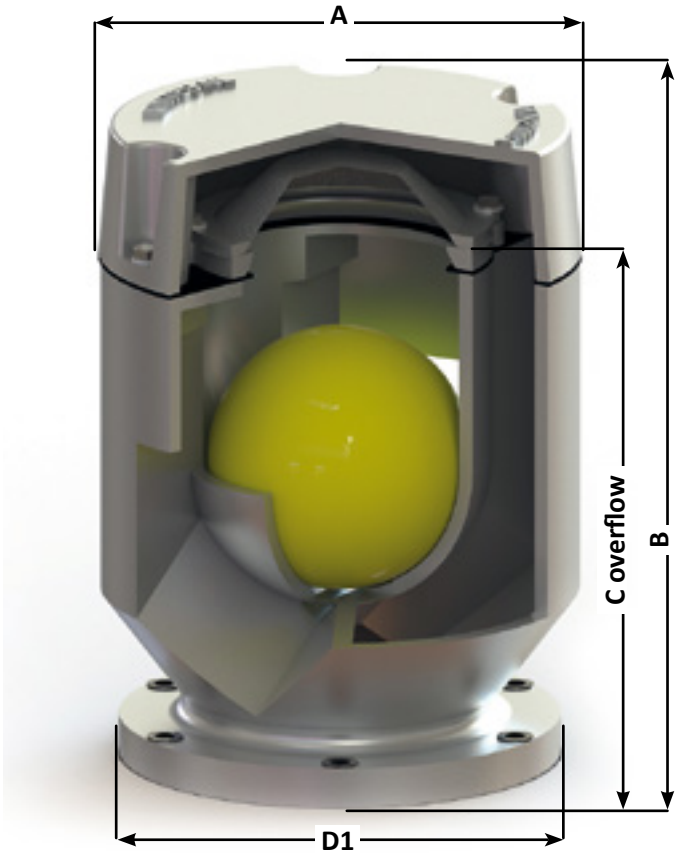

WIN2000 HIAS with screen and small flange connection
(screen is optional)

Counter flange WIN2000 HIAS Small flange

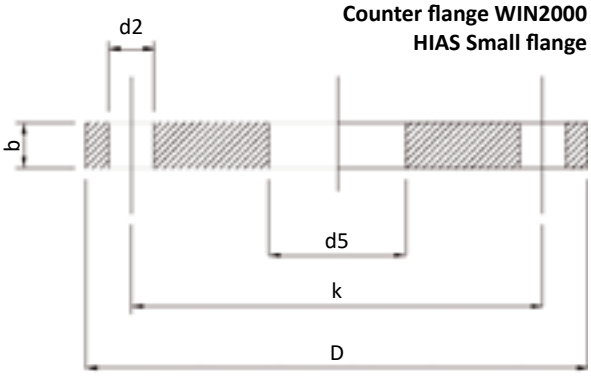

Made of seawater resistant Aluminium DIN1725 | Non corroding | Maintenance free | Smallest design available
No suction blocking | Cost saving | light weight = less fuel = less CO2 emission | Approved by all major classification societies

Winteb B.V.
Parallelweg 1
9672 AW Winschoten
The Netherlands

Tel: +31 597 412252
Fax: +31 597 420494
Email: info@winteb.nl
Website: www.winteb.com

Bank: ABN AMRO
Bank account: 211159689
IBAN: NL58ABNA0211159689
Bic: ABNANL2A

KvK/CC: 56801068
VAT: NL852308413B01

The world's largest producer of seawater resistant aluminium air pipe heads
Innovative and high quality products

WIN2000 HIAS AIR PIPE HEADS WITH CLOSING DEVICE

Options:

1. Closing device*
2. Screen*
3. Threaded connection, only for aluminium pipes.
4. Powder (epoxy) coating
5. Sounding pipe
6. Small flange connection

**Either option 1 or 2*
(Closing device or screen)

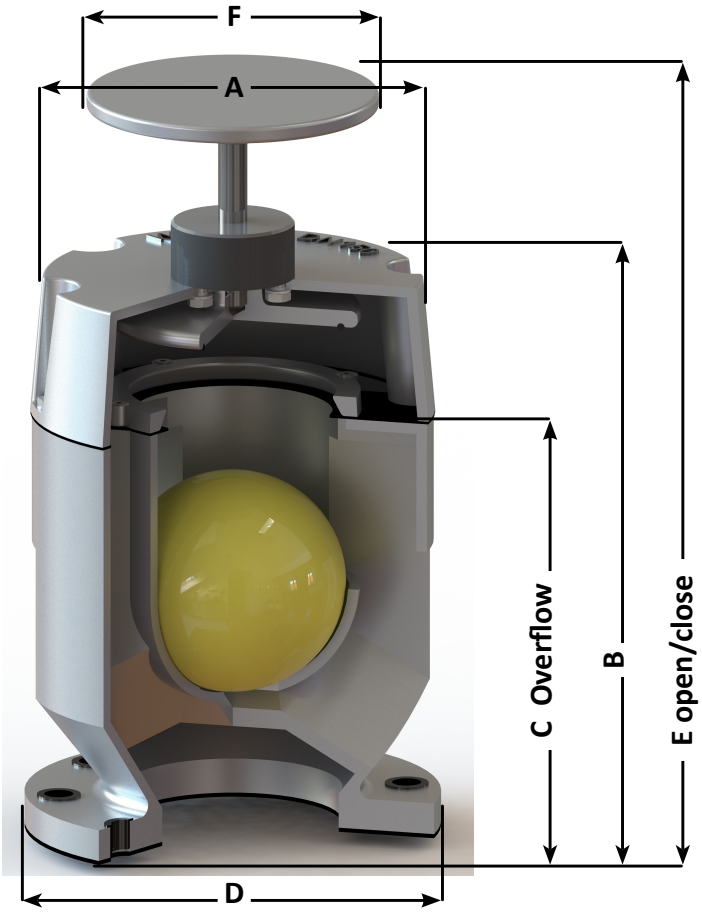

	DN50 (2")	DN65 (2 ½")	DN80 (3")	DN100 (4")	DN125 (5")	DN150 (6")	DN175 (7")	DN200 (8")	DN250 (10")	DN300 (12")	DN350 (14")	DN400 (16")	DN450 (18")
A	Ø110	Ø130	Ø160	Ø195	Ø237	Ø275	Ø275	Ø343	Ø442	Ø570	Ø640	Ø728	Ø740
B ±2.5	185	230	251	293	345	401	401	481	595	741	842	950	1110
C (Overflow)	143	172	190	229	268	316	316	390	478	600	695	760	925
D	Flange connection according to any standard												
E (Open/close)	248/ 233	300/ 270	327/ 300	390/ 355	452/ 405	529/ 485	529/ 485	649/ 584	756/ 680	932/ 838	1041/ 943	1189/ 1046	1317/ 1166
F	Ø100	Ø100	Ø100	Ø120	Ø120	Ø200	Ø200	Ø200	Ø300	Ø300	Ø300	Ø300	Ø300
Ball diameter	Ø60	Ø75	Ø90	Ø105	Ø130	Ø155	Ø155	Ø200	Ø250	Ø325	Ø360	Ø400	Ø480
Weight incl. closing device (kg.)	2.5	3.5	4.75	7.5	10	14	15	21.5	34	65	90	117	138
Flow rate at 0,25 bar(m3/h)	19	28	46	73	114	182	210	325	469	850	1025	1300	1490
Max. inlet air speed (m/s)	17	17,5	38	58	59	42	42	27	15	39	36	27	34
Inlet air flow rate at max inlet air	135	209	612	1620	2590	2700	2700	3060	2700	9900	12240	12060	19080
Flow curves	See reverse side												

Made of seawater resistant Aluminium DIN1725 | Non corroding | Maintenance free | Smallest design available
No suction blocking | Cost saving | light weight = less fuel = less CO2 emission | Approved by all major classification societies

Winteb B.V.
Parallelweg 1
9672 AW Winschoten
The Netherlands

Tel: +31 597 412252
Fax: +31 597 420494
Email: info@winteb.nl
Website: www.winteb.com

Bank: ABN AMRO
Bank account: 211159689
IBAN: NL58ABNA0211159689
Bic: ABNANL2A

KvK/CC: 56801068
VAT: NL852308413B01

The world's largest producer of seawater resistant aluminium air pipe heads
Innovative and high quality products

WIKO5000 TYPE1-A AIR PIPE HEADS
DN50-DN125

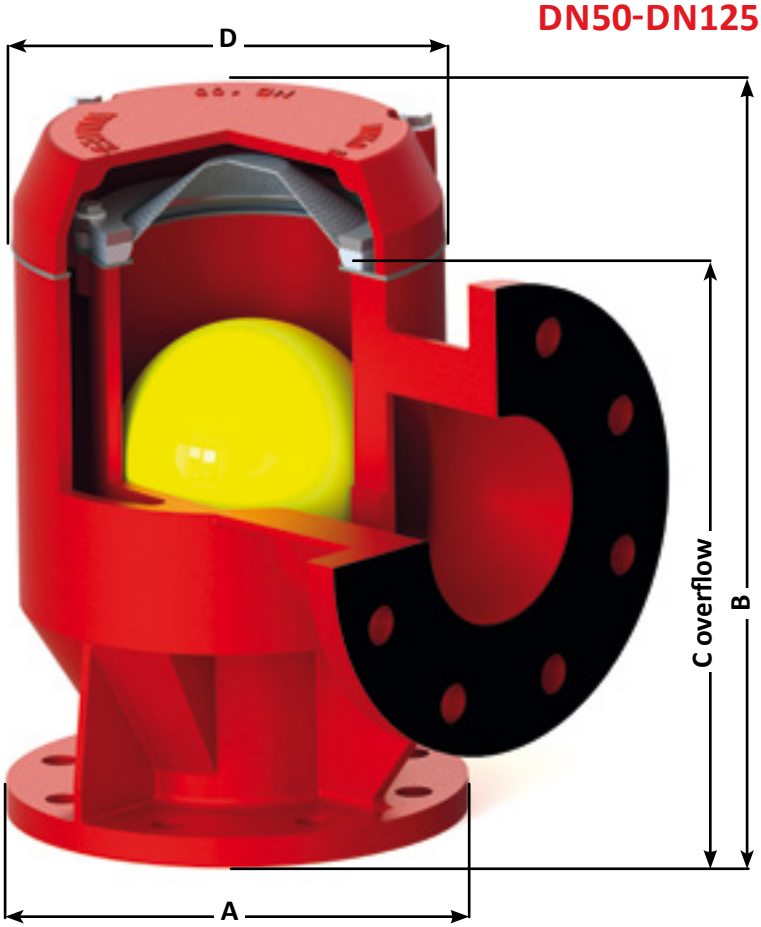

Options:

1. Screen
2. Sounding pipe
3. Closing device
4. Vacuum Breaker

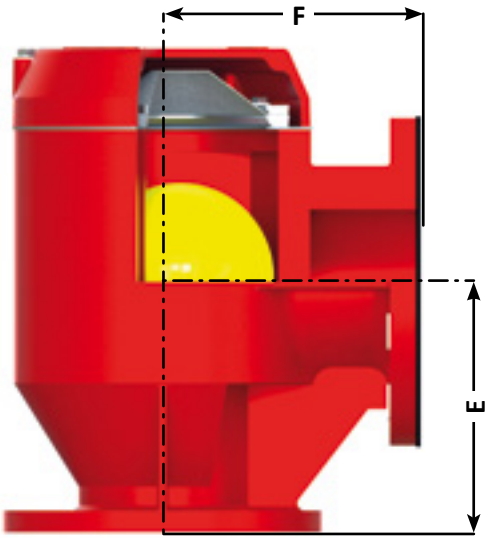

	DN50 (2")	DN65 (2 ½")	DN80 (3")	DN100 (4")	DN125 (5")
A	A Flange connections according to international standards				
B ±2.5	240	240	240	335	335
C Overflow	210	210	210	260	260
D	Ø156	Ø156	Ø156	Ø205	Ø205
E	105	112.5	122.5	170	170
F	130	130	130	175	175
Ball diameter	Ø90	Ø90	Ø90	Ø105	Ø130
Weight kg.	4.5	5	6	10	12
Flow rate at 0,25 bar(m3/h)*	28.7	31.4	35.7	72.6	76.9
Max. inlet air speed (m/s)	16.5	10	7	10	8.5
Inlet air flow rate at max. inletair speed (m3/h)	108	126	129	288	396

*Please note that these values correspond with the WIKO5000 Type 1A with screen mesh 18, flowrate is with water being pumped through the air pipe head

WIKO5000 Type 1A Air Pipe Head
Also available in de-icing system
Picture below shows a WIKO5000 Type 1A DN50 with de-icing system

Made of seawater resistant Aluminium DIN1725 | Non corroding | Maintenance free | Smallest design available
No suction blocking | Cost saving | light weight = less fuel = less CO2 emission | Approved by all major classification societies

Winteb B.V.
Parallelweg 1
9672 AW Winschoten
The Netherlands

Tel: +31 597 412252
Fax: +31 597 420494
Email: info@winteb.nl
Website: www.winteb.com

Bank: ABN AMRO
Bank account: 211159689
IBAN: NL58ABNA0211159689
Bic: ABNANL2A

KvK/CC: 56801068
VAT: NL852308413B01

WIKO5000 TYPE1-A AIR PIPE HEADS
DN150-DN400

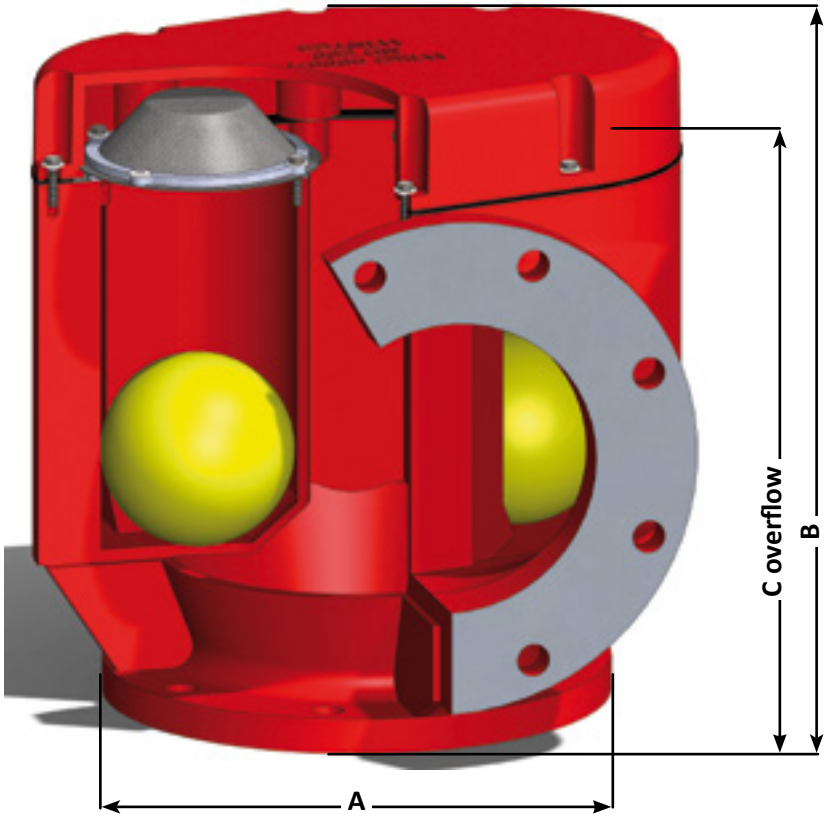

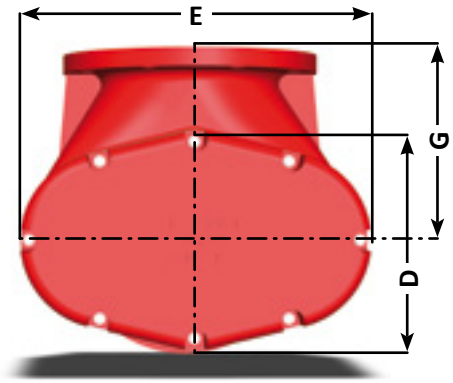

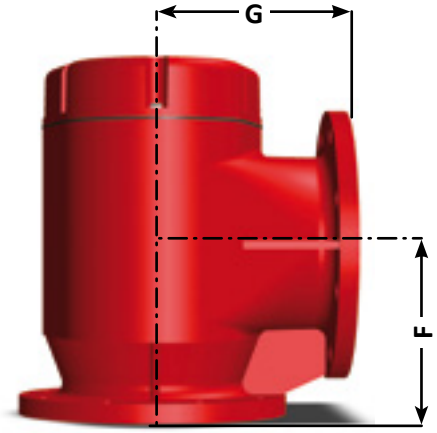

	DN150 (6”)	DN175 (7”)	DN200 (8”)	DN250 (10”)	DN300 (12”)	DN350 (14”)	DN400 (16”)
A	Flange connections according to international standards						
B ±2.5	365	365	430	430	565	565	565
C Overflow	320	320	375	375	465	465	465
D	270	270	270	270	450	450	450
E	375	375	440	440	610	610	610
F	190	202.5	215	230	270	295	270
G	245	245	245	245	350	350	350
Ball diameter	Ø130	Ø130	Ø130	Ø130	Ø240	Ø240	Ø240
Weight kg.	22	25	30	32	55	57	60
Flow rate at 0,25 bar(m3/h)*	151.8	151.8	257.7	265.6	510.5	506.3	514.3
Max. inlet air speed (m/s)	14	14	14	11	15	9.5	10
Inlet air flow rate at max. inlet air speed (m3/h)	900	900	1530	2052	3780	3420	4320

*Please note that these values correspond with the WIKO5000 Type 1A with screen mesh 18, flowrate is with water being pumped through the air pipe head

WIKO5000 Type 1A Air Pipe Head
Also available in de-icing system
Picture below shows a WIKO5000 Type 1A DN200 with de-icing system

Investing in Winteb Air Pipe Heads is beneficial in the long term, saving maintenance, replacement and costs.
For more information and a complete overview of our product range, please check www.winteb.com

Winteb B.V.
Parallelweg 1
9672 AW Winschoten
The Netherlands

Tel: +31 597 412252
Fax: +31 597 420494
Email: info@winteb.nl
Website: www.winteb.com

Bank: ABN AMRO
Bank account: 211159689
IBAN: NL58ABNA0211159689
Bic: ABNANL2A

KvK/CC: 56801068
VAT: NL852308413B01

The world's largest producer of seawater resistant aluminium air pipe heads
Innovative and high quality products

WIKO5000 GOOSENECK TYPE 1B WITH SCREEN

Options:

1. Screen
2. Powder coating

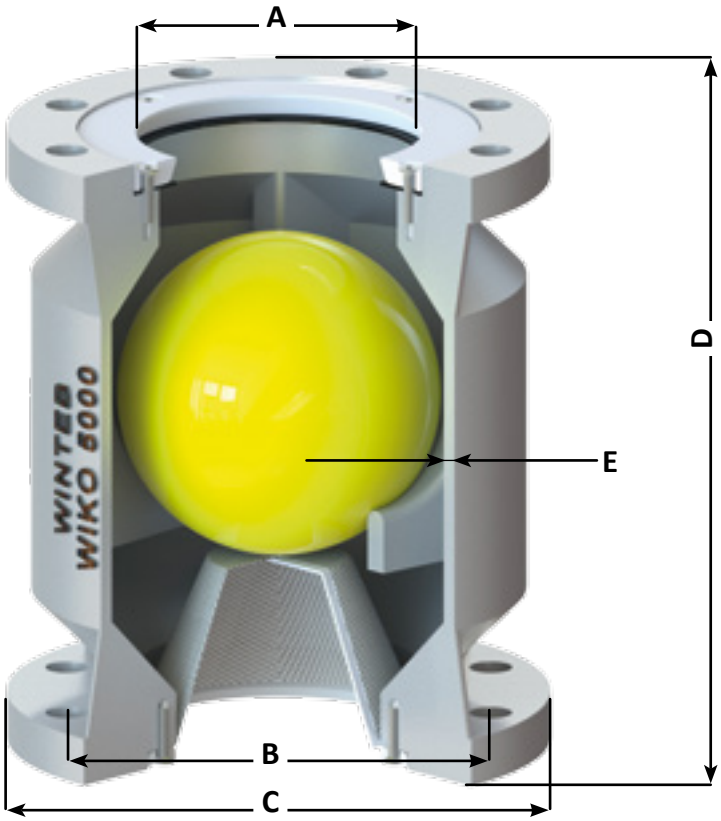

	DN50 (2")	DN65 (2 ½")	DN80 (3")	DN100 (4")	DN125 (5")	DN150 (6")	DN200 (8")	DN250 (10")	DN300 (12")	DN350 (14")	DN400 (16")
A	Ø50	Ø65	Ø80	Ø100	Ø125	Ø150	Ø200	Ø250	Ø300	Ø350	Ø400
B	Flange connections according to international standards										
C											
D (mm)	170	200	225	255	290	330	405	490	560	625	700
E (mm)	6.5	6.5	6.5	7.5	7.5	8.0	8.5	8.5	10.0	10.0	10.0
Ball diameter	Ø60	Ø90	Ø90	Ø120	Ø145	Ø170	Ø227	Ø280	Ø325	Ø360	Ø400
Weight kg.	4	4	7	7	8	13	22	31	47	64	83
Flow rate at 0,25 bar(m3/h)*	27	44	74	114	166	271	444	605	935	1250	1760
Max. inlet air speed (m/s)	16	17	22	22.5	22.5	22.5	14	22.5	20	24	22.5
Inlet air flow rate at max. inlet air speed (m3/h)	117	198	396	630	990	1440	1530	3960	5040	8100	9900

* Please note that these values correspond with the WIKO5000 Gooseneck type 1B **with screen mesh 18**, flowrate is with water being pumped through the air pipe head

Made of seawater resistant Aluminium DIN1725 | Non corroding | Maintenance free | Smallest design available
No suction blocking | Cost saving | light weight = less fuel = less CO2 emission | Approved by all major classification societies

Winteb B.V.
Parallelweg 1
9672 AW Winschoten
The Netherlands

Tel: +31 597 412252
Fax: +31 597 420494
Email: info@winteb.nl
Website: www.winteb.com

Bank: ABN AMRO
Bank account: 211159689
IBAN: NL58ABNA0211159689
Bic: ABNANL2A

KvK/CC: 56801068
VAT: NL852308413B01

The world's largest producer of seawater resistant aluminium air pipe heads
Innovative and high quality products

WIKO5000 GOOSENECK TYPE 1

Options:

1. Screen
2. Powder coating

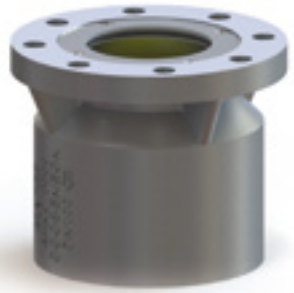

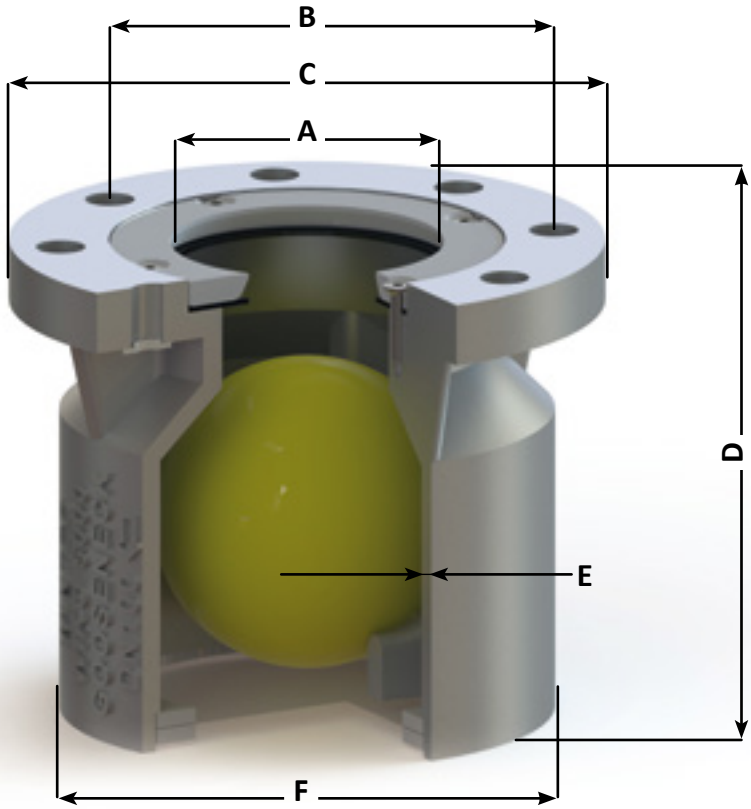

	DN50 (2")	DN65 (2 ½")	DN80 (3")	DN100 (4")	DN125 (5")	DN150 (6")	DN200 (8")	DN250 (10")	DN300 (12")	DN350 (14")	DN400 (16")
A	Ø50	Ø65	Ø80	Ø100	Ø125	Ø150	Ø200	Ø250	Ø300	Ø350	Ø400
B	Flange connections according to international standards										
C											
D (mm)	115	140	160	185	215	245	310	375	430	485	540
E (mm)	6.5	6.5	6.5	7.5	7.5	8.0	8.5	8.5	10.0	10.0	10.0
F (mm)	110	135	160	190	225	260	335	415	495	555	630
Ball diameter	Ø60	Ø90	Ø90	Ø120	Ø145	Ø170	Ø227	Ø280	Ø325	Ø360	Ø400
Weight kg.	2	2	3	4	5	7	16	23	36	53	66
Flow rate at 0,25 bar (m3/h)*	27	43	101	143	211	292	749	1280	1860	1510	2300
Max. inlet air speed (m/s)	16	17	22	22.5	22.5	22.5	14	22.5	20	24	22.5
Inlet air flow rate at max. inlet air speed (m3/h)	117	198	396	630	990	1440	1530	3960	5040	8100	9900

* Please note that these values correspond with the WIKO5000 Gooseneck type 1 **with screen mesh 18**, flowrate is with water being pumped through the air pipe head

Investing in Winteb Air Pipe Heads is beneficial in the long term, saving maintenance, replacement and costs.
For more information and a complete overview of our product range, please check www.winteb.com

Winteb B.V.
Parallelweg 1
9672 AW Winschoten
The Netherlands

Tel: +31 597 412252
Fax: +31 597 420494
Email: info@winteb.nl
Website: www.winteb.com

Bank: ABN AMRO
Bank account: 211159689
IBAN: NL58ABNA0211159689
Bic: ABNANL2A

KvK/CC: 56801068
VAT: NL852308413B01

The world's largest producer of seawater resistant aluminium air pipe heads
Innovative and high quality products

NEW IN OUR PROGRAM: WINTEB WATERTRAP

The WINTEB watertrap has been designed to avoid the exit of water from stability tanks and therefor preventing the decrease of stability of the ship. In severe weather conditions, which will cause a lot of rolling and pitching of the ship and thus a high level of filling for the stability tanks, the WINTEB water-trap will prevent the accidental discharge of water through the Air Pipe Heads. A WINTEB watertrap is placed underneath the (WINTEB) Air Pipe Heads. This construction can also be used for ballast water tanks or tanks where similar situations could occur.

Another very positive side effect is that when the WINTEB watertrap is combined with our WIN2000 HIAS Air Pipe Head (with the patented HIAS technology), extremely High Inlet Air Speeds can be faced and so called 'suction blocking', e.g. vacuuming of the ball, will no longer occur.

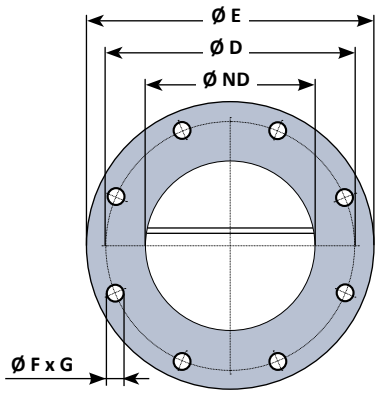

Picture 2: Top view WINTEB WATERTRAP

Picture 1: WINTEB WATERTRAP

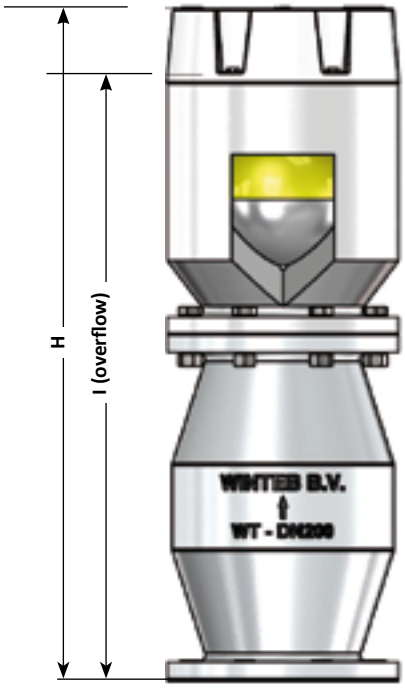

Picture 3: WIN2000 AIR PIPE HEAD PLACED ON TOP OF WINTEB WATERTRAP

	A (mm)	B (mm)	C (mm)	D	E	F	G	H (mm)	I (mm)	Weight (kg)
DN100	290	176	20	HOLE PATTERN/ FLANGE CONNECTION DRILLED ACCORDING TO ANY INTERNATION-AL STANDARD				566	520	7
DN125	344	212	22					668	614	10
DN150	393	250	22					776	710	14
DN200	505	326	25					988	897	23
DN250	675	411	30					1272	1158	40
DN300	789	486	32					1568	1389	56

Made of seawater resistant Aluminium DIN1725 | Non corroding | Maintenance free | Smallest design available
No suction blocking | Cost saving | light weight = less fuel = less CO2 emission | Approved by all major classification societies

Winteb B.V.
Parallelweg 1
9672 AW Winschoten
The Netherlands

Tel: +31 597 412252
Fax: +31 597 420494
Email: info@winteb.nl
Website: www.winteb.com

Bank: ABN AMRO
Bank account: 211159689
IBAN: NL58ABNA0211159689
Bic: ABNANL2A

KvK/CC: 56801068
VAT: NL852308413B01

The world's largest producer of seawater resistant aluminium air pipe heads
Innovative and high quality products

LIQUID MUD VALVE

NEW: LIQUID MUD VALVE (LMV) WITH DE-ICING SYSTEM

Face the cold withWinteb's heated Air Pipe Heads.

Photo 1: Heated LMV

Photo 2: Heated LMV
Valve in closed position

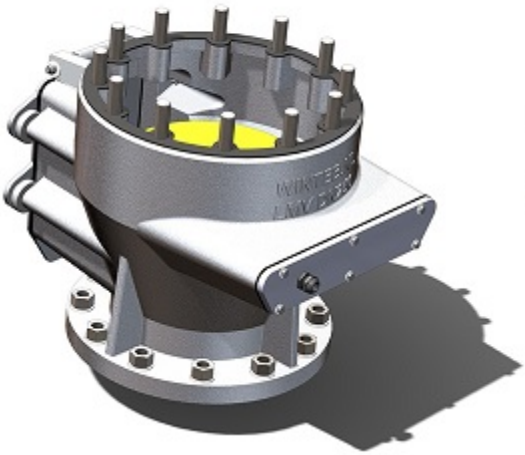

Photo 3: Heated LMV
Valve in closed position, with exposed heating elements

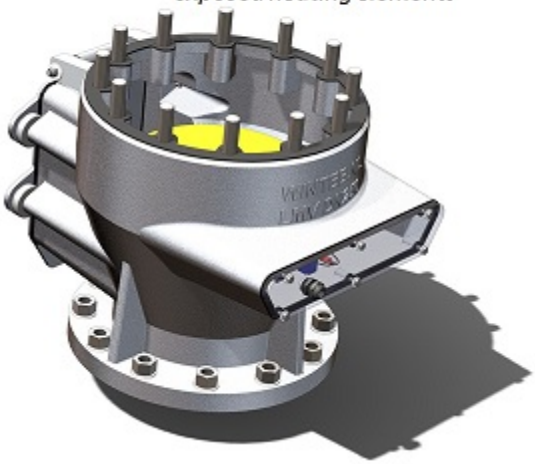

Made of seawater resistant Aluminium DIN1725 | Non corroding | Maintenance free | Smallest design available
No suction blocking | Cost saving | light weight = less fuel = less CO2 emission | Approved by all major classification societies

Winteb B.V.
Parallelweg 1
9672 AW Winschoten
The Netherlands

Tel: +31 597 412252
Fax: +31 597 420494
Email: info@winteb.nl
Website: www.winteb.com

Bank: ABN AMRO
Bank account: 211159689
IBAN: NL58ABNA0211159689
Bic: ABNANL2A

KvK/CC: 56801068
VAT: NL852308413B01

The world's largest producer of seawater resistant aluminium air pipe heads
Innovative and high quality products

WIN2000
AIR VENT HEAD

PE FLOAT DISC

LIQUID MUD VALVE

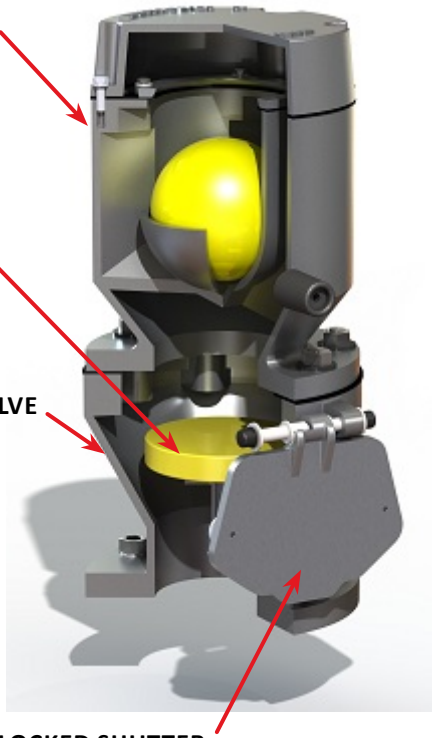

MAGNETICALLY LOCKED SHUTTER

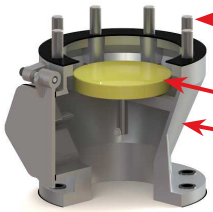

VALVE IN CLOSED POSITION
Flange connection ANSI150, DINPN10
Regular tank vent check valve to be fitted on top.
PE Float Disc
Seawater resistant aluminium casting

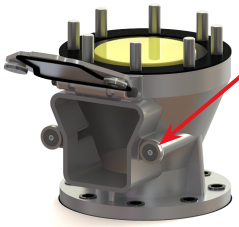

VALVE IN OPEN POSITION
Opening pressure adjustable by magnets.

LMV	Surface Area Front Cover (mm2)	Tensile Force (kg)	Pressure (bar)
DN125	12342.60	11	0.1
DN150	17871.98	32	0.2
DN200	32310.48	34	0.1
DN250	50430.48	38	0.1

On request, the opening pressure of the LMV can be adjusted conform client's requirements.

MUD BUILDS UP IN THE LOWER CHAMBER (LMV-VALVE) UNTIL IT IS ALMOST COMPLETELY FILLED...

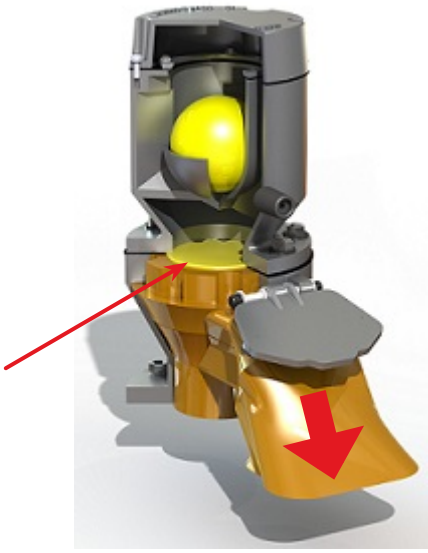

...THE FLOATER SHUTS OFF THE AIR VENT FROM THE LMV. THE PRESSURE OF THE MUD WILL OPEN THE MAGNETICALLY LOCKED SHUTTER

Investing in Winteb Air Pipe Heads is beneficial in the long term, saving maintenance, replacement and costs.
For more information and a complete overview of our product range, please check www.winteb.com

Winteb B.V.
Parallelweg 1
9672 AW Winschoten
The Netherlands

Tel: +31 597 412252
Fax: +31 597 420494
Email: info@winteb.nl
Website: www.winteb.com

Bank: ABN AMRO
Bank account: 211159689
IBAN: NL58ABNA0211159689
Bic: ABNANL2A

KvK/CC: 56801068
VAT: NL852308413B01

The world's largest producer of seawater resistant aluminium air pipe heads
Innovative and high quality products

ANALYSES OF THE SEAWATER RESISTANT ALUMINIUM USED FOR THE WINTEB AIR PIPE HEADS.

The seawater resistant aluminium used for Winteb Air Pipe Heads is AlMgSi7.

This alloy is according to DIN1725 standard. This standard is comparable, but more accurate, to the US standards 6061, AA A356 and ASTM SG70. All these standards except for 6061 are primary aluminium foundry alloy standards. Comparison is also made to the aluminium alloy used by Chinese manufacturers of aluminium Air Vent Heads and shows that **the aluminium used by the Chinese manufacturers is not seawater resistant at all.**

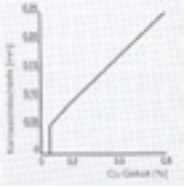

With regard to the seawater (corrosion) resistance, the amount of Cu (copper) and Fe (iron) in the alloy is critical, especially Cu, which has a bad influence on the seawater (corrosion) resistance of the alloy.
In general; "The less Cu in the aluminium alloy the better the seawater (corrosion) resistance".
Curve 1 shows the relation between possible corrosion hole depth and the amount of Cu in the aluminium alloy. As you can see more Cu means deeper corrosion holes and therefore less seawater (corrosion) resistance.
This is the main reason why Winteb uses aluminium alloy according to DIN1725 standard. It guarantees the lowest possible Cu amount in the alloy. By using the DIN1725 alloy for their Air Pipe Heads Winteb achieves the best possible seawater resistance available.

Curve 1; the relation between the corrosion hole depth and the amount of Cu in the aluminium alloy.

You can see in the table below the aluminium alloy according to the DIN1725 standard has the lowest Cu and Fe additions and therefore the best seawater (corrosion) resistance compared to the AA356, 6061/6082 standards and the Chinese competitors.

The amount of Cu, which is the negative factor in the seawater (corrosion) resistance, allowed in the DIN1725 (used by Winteb) is 75% less than A356 and 86% less than 6061.

Chemical analyses of the most common used aluminium alloys used in the shipbuilding industry								
	in % of mass							
	Main alloy components				**Max. allowed additions**			
Standard	**Si**	**Mg**	**Ti**	**Al**	**Cu**	**Fe**	**Mn**	**Zn**
DIN1725	6,5 -7,5	0,25-0,45	0,001-0,2	Rest %	**0,05**	**0,18**	0,1	0,07
A356	6,5 -7,5	0,2	0,2	Rest %	**0,2**	**0,2**	0,1	0,1
6061	0,4-0,8	1,2	0,15	Rest %	**0,35**	**0,7**	0,15	0,25
6082	07-1.3	0.6-1.2	0.10	Rest %	**0.1**	**0.5**	0.40-1.0	0.2
***Nantong Ruida Navigation Machinery produced Air Vent Heads**				Rest %	**1.54**	**0,0**		
****ZL 101 properties of Taixing Haixing produced Air Vent Heads**				Rest %	**0.2**	**0.5-0.9**	0.35	0.3

* As you can see in the analysis of the aluminium used by Nantong Ruida Navigation Machinery Co., LTD., the mass% Cu (Copper), which has a very negative influence on the corrosion resistance of aluminium, is 1,54 mass% which is **3080% more than the maximum allowed % according to DIN1725.**

This shows that the aluminium used by Nantong Ruida Navigation Machinery Co., LTD. for their copies of the Winteb vent heads is absolutely non seawater resistant aluminium and may not be sold and promoted as such.

** As you can also see in the description of the ZL 101 alloy as used by our competitor, the mass% Cu (Copper), which has a very negative influence on the corrosion resistance of aluminium, is 0,2 mass% which is **400% more than the maximum allowed % according to DIN1725. Furthermore, all other max. allowed chemical substances are exceeding their limits. Iron (Fe) is at least 277% more than allowed according to DIN1725.**

This shows that the ZL 101 aluminium used by our competitor is absolutely not seawater resistant aluminium and may not be sold and promoted as such.

Conclusion; Winteb uses the best possible aluminium alloy (DIN1725) available to guarantee our customers the best seawater resistance of the aluminium Air Pipe Heads.

Winteb B.V.
Parallelweg 1
9672 AW Winschoten
The Netherlands

Tel: +31 597 412252
Fax: +31 597 420494
Email: info@winteb.nl
Website: www.winteb.com

Bank: ABN AMRO
Bank account: 211159689
IBAN: NL58ABNA0211159689
Bic: ABNANL2A

KvK/CC: 56801068
VAT: NL852308413B01

The world's largest producer of seawater resistant aluminium air pipe heads
Innovative and high quality products

WINTEB SEAWATER RESISTANT ALUMINIUM AIR PIPE HEADS: COST SAVING LONG TERM INVESTMENT

Comparison of investment over a period of 25 years

Winteb non corroding aluminium Air Pipe Heads versus cast iron & galvanised steel Air Pipe Heads

Years	Replacement			Total investment		
	cast iron	***galvanised steel***	***Winteb***	***cast iron***	***galvanised steel***	***Winteb***
start				60%	90%	100%
4	YES	spare parts	NO	120%	90%	remains at 100%
8	YES	YES	NO	180%	180%	remains at 100%
12	YES	spare parts	NO	240%	180%	remains at 100%
16	YES	YES	NO	300%	270%	remains at 100%
20	YES	spare parts	NO	360%	270%	remains at 100%
24	YES	YES	NO	420%	360%	remains at 100%

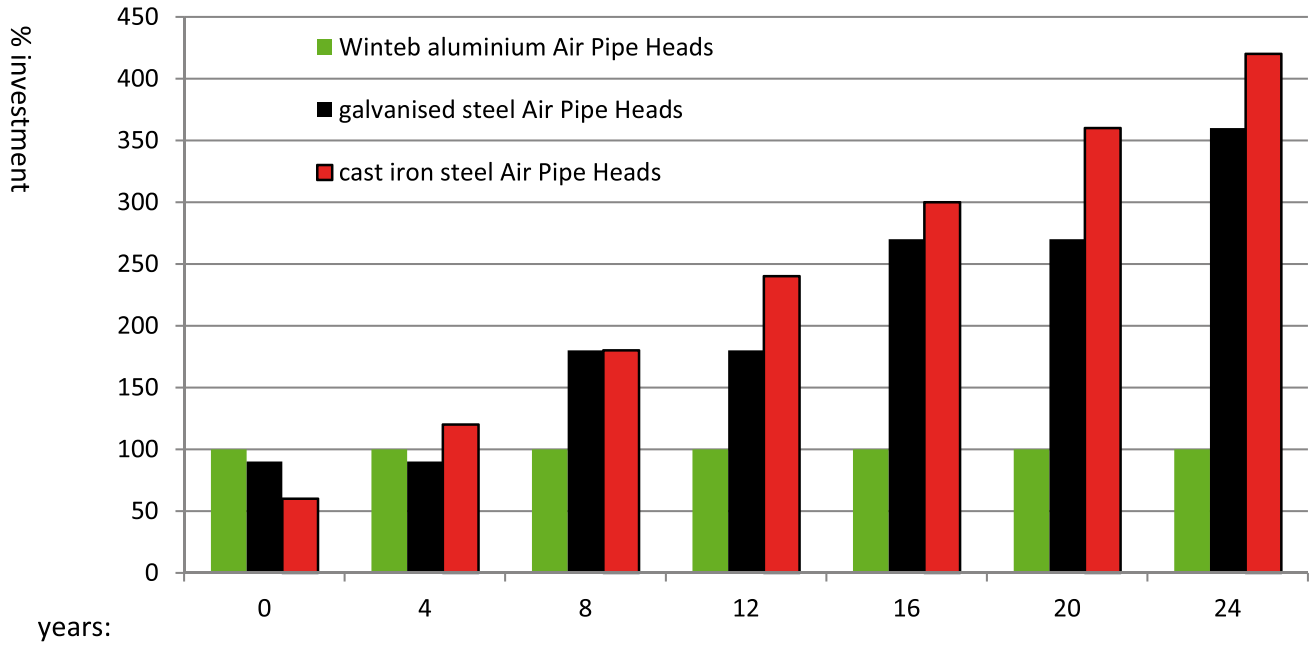

Made of seawater resistant Aluminium DIN1725 | Non corroding | Maintenance free | Smallest design available
No suction blocking | Cost saving | light weight = less fuel = less CO2 emission | Approved by all major classification societies

Winteb B.V.
Parallelweg 1
9672 AW Winschoten
The Netherlands

Tel: +31 597 412252
Fax: +31 597 420494
Email: info@winteb.nl
Website: www.winteb.com

Bank: ABN AMRO
Bank account: 211159689
IBAN: NL58ABNA0211159689
Bic: ABNANL2A

KvK/CC: 56801068
VAT: NL852308413B01

The world's largest producer of seawater resistant aluminium air pipe heads
Innovative and high quality products

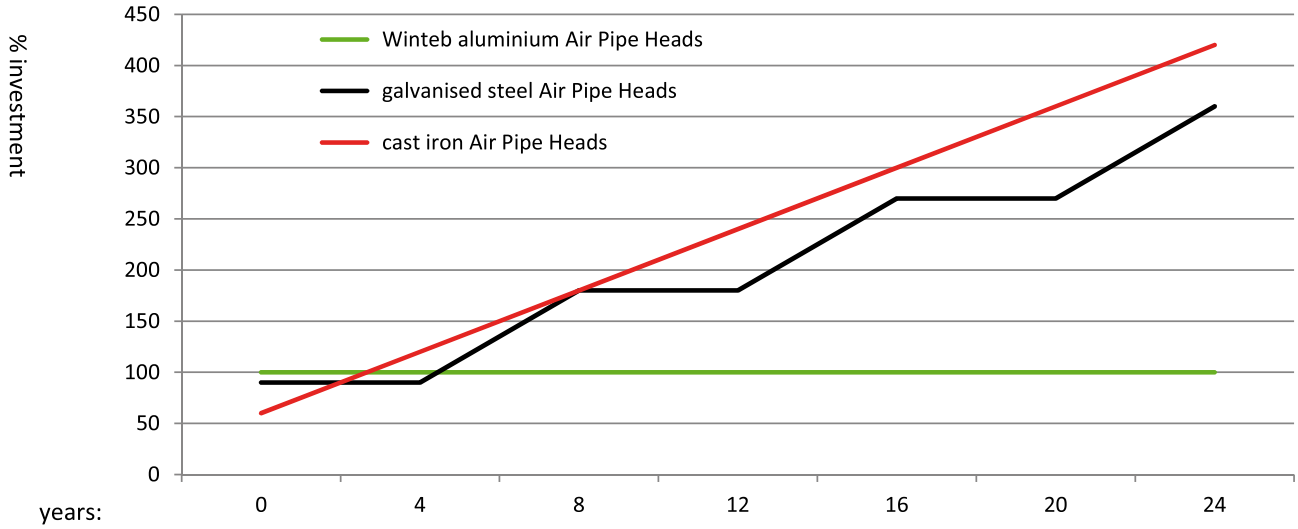

LESS WEIGHT=LESS FUEL
WHY CARRY MORE THAN NECESSARY?

Weight comparison Winteb aluminium vs. galvanised steel vs. cast iron Air Pipe Heads

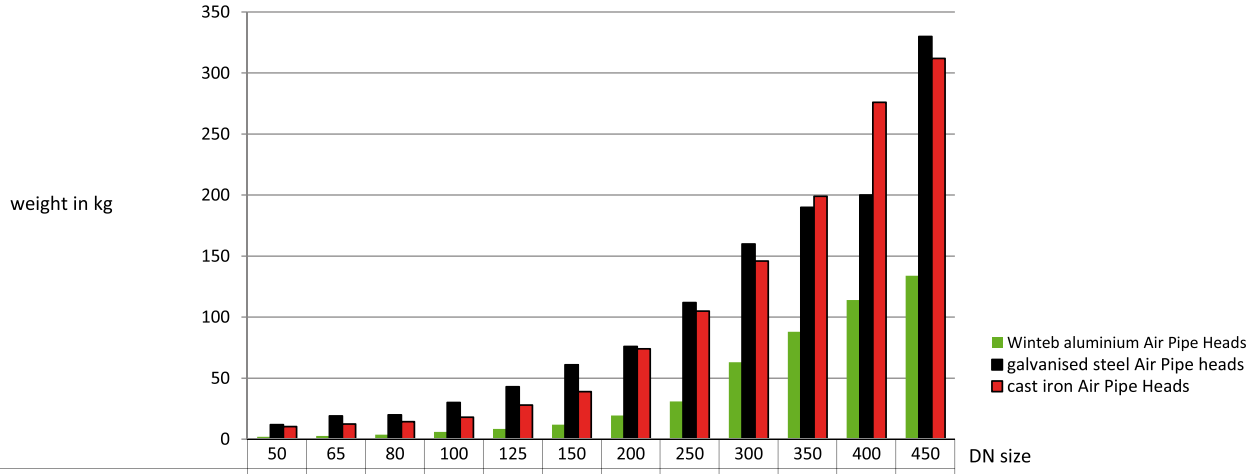

	50	65	80	100	125	150	200	250	300	350	400	450
Winteb aluminium Air Pipe Heads	2	2,75	3,75	6	8,5	12	19,5	31	63	88	114	134
galvanised steel Air Pipe heads	12	19	20	30	43	61	76	112	160	190	200	330
cast iron Air Pipe Heads	10,4	12,5	14,4	18	28	39	74	105	146	199	276	312

Investing in Winteb Air Pipe Heads is beneficial in the long term, saving maintenance, replacement and costs.
For more information and a complete overview of our product range, please check www.winteb.com

Winteb B.V.
Parallelweg 1
9672 AW Winschoten
The Netherlands

Tel: +31 597 412252
Fax: +31 597 420494
Email: info@winteb.nl
Website: www.winteb.com

Bank: ABN AMRO
Bank account: 211159689
IBAN: NL58ABNA0211159689
Bic: ABNANL2A

KvK/CC: 56801068
VAT: NL852308413B01

WIN2000 HIAS AIR PIPE HEADS: PRESSURE DROP VS. FLOW RATE CHARACTERISTICS

According to classification societies the air pipe head characteristic curves are to be taken into consideration at the design stage of the ballast system. Flowrate in m3/h

WIN2000 HIAS without screen sizes DN50-250

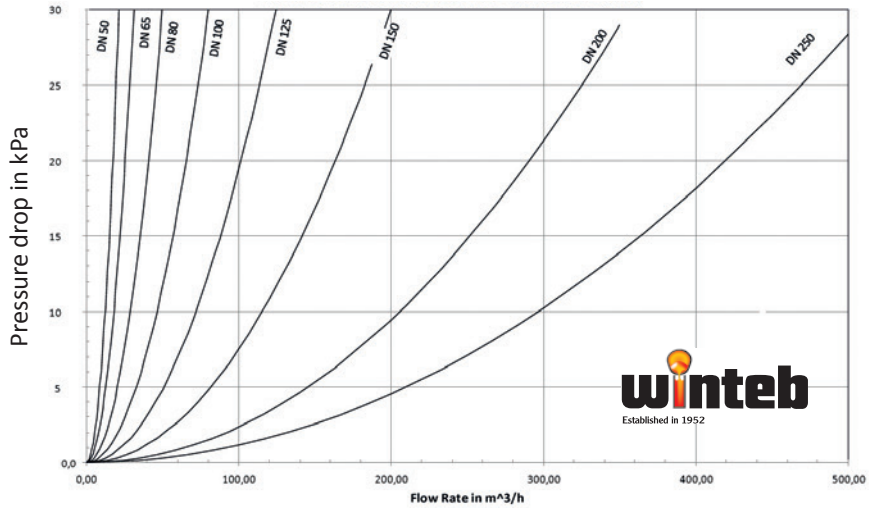

WIN2000 HIAS without screen size DN300-500

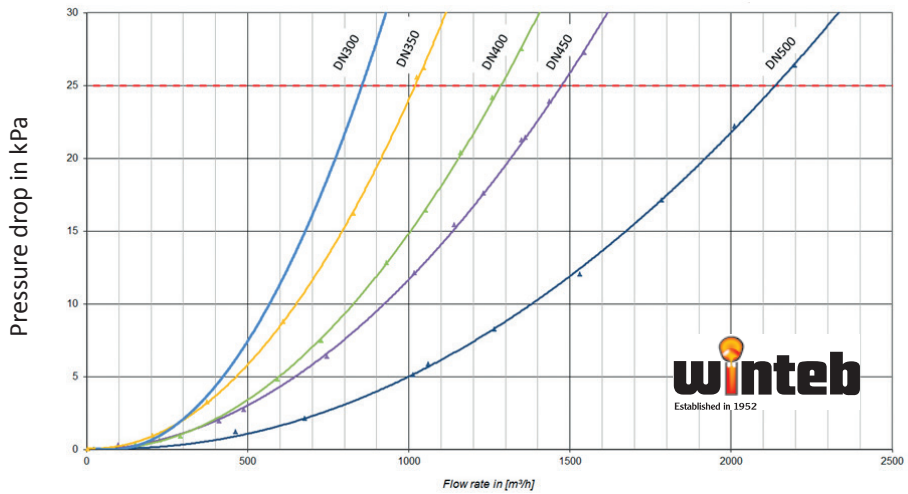

WIN2000 HIAS with screen mesh 18 sizes DN50-250

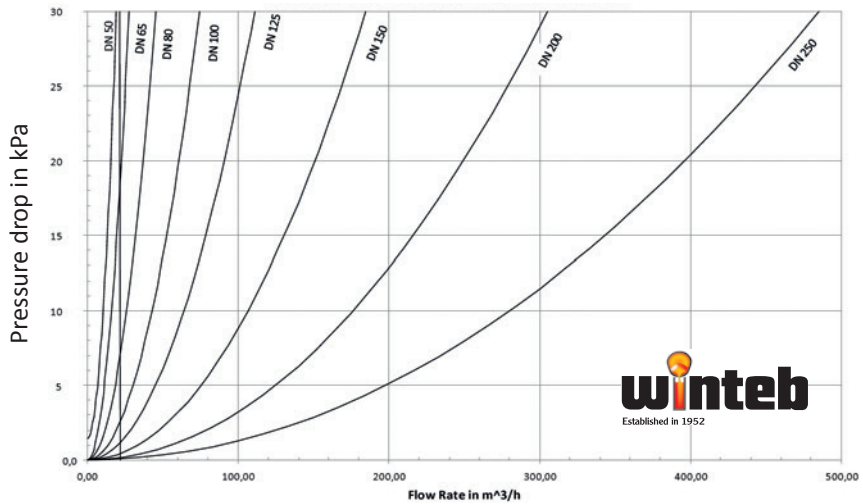

WIN2000 HIAS with screen mesh 18 size DN300-500